PX0707/P/09/WH2 Datasheet

Product Name // Rear Panel Mount PCB Mount Connector
PX0707 Series 9 Contact Plug White Insert

View Product Page

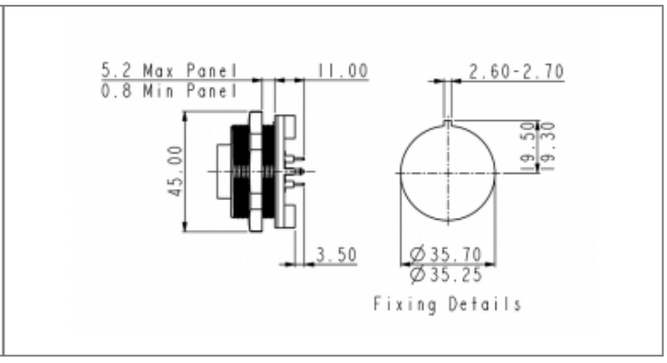

// Product Description:

- Rear Panel Mount Connectors
- Water and dustproof to IP68 when mated with compatible connector
- Plug or Socket
- 3, 4, 6, 9, 12, 25 Contact
- PCB mount with gold plated contacts supplied fitted
- Choice of coloured inserts to enable positive visual identification of connector:
- Part codes suffixed with a colour code followed by 2 have that colour insert
- Colour choices and colour codes: Blue (BL), Green (GN), Grey (GY), Light Grey (LG), Red (RD), White (WH), Yellow (YL), Black (standard colour, no suffix code)
- PX0711 Sealing Cap available separately to maintain IP rating of unmated connectors
- Mate with PX07 Series Flex Connectors

// General Information:

Product Display Title:	Rear Panel Mount Connectors
Product Family:	Circular Power Connectors
Product Series:	Standard Buccaneer
Approvals:	CSA, UL, VDE
Body Material:	Polyamide (PA)
Body Material Type:	Plastic Body
Contact Type:	Plug Contact
Coupling Type:	Screw
Current Max:	5A
Diameter Over Coupling Ring Mm:	38.1mm
Flamability Rating:	UL94V-0
Function:	Rear Panel Mount PCB Mount Connector
Insert Colour:	White Insert
Ip Rating:	IP68, IP69K
Max Operating Temperature:	+70°C
Min Operating Temperature:	-20°C
Number Of Contacts:	9 Contacts
Voltage Max:	150V

// Product PDF Links

Standard Series power connectors...