BZV47/Z0000/69 Datasheet

Product Name // Vertical Power Entry Module 58.4mm Sheet F Shuttered Outlet (PX0783) 6.3mm Tab Termination Unfiltered Single Contact Switch Marked I/O

View Product Page

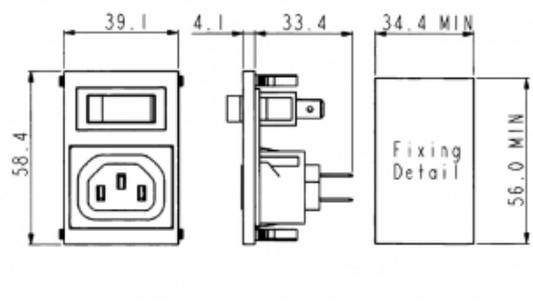

// Product Description:

- Vertical Power Entry Module 58.4mm
- Sheet F Shuttered (PX0783) or Non-Shuttered (PX0695) Outlet:
- Part codes prefixed BZV47, BZV48: Shuttered Outlet
- Part codes prefixed BZV45, BZV46: Non-Shuttered Outlet
- Choice of Termination depending on part code:
- Part codes prefixed BZV45, BZV47: 6.3mm Tab
- Part codes prefixed BZV46, BZV48: 2.8mm Tab
- Choice of switch and illumination options as specified by individual part code

// General Information:

Product Display Title:	Vertical Power Entry Module 58.4mm
Product Family:	IEC Connectors
Product Series:	Power Entry Modules
Current Max:	10A
Filter Type:	Unfiltered
Function:	Power Entry Module Sheet F Outlet
Iec Connector Components:	None
Iec Connector Mates With:	PX0783
Iec Filter Options:	Unfiltered
Iec Vertical Module Height:	58.4mm
Inlet Type:	Sheet F Shuttered Outlet
Switch Type:	Single Contact Marked I/O
Voltage Max:	250V

// Product PDF Links

Power Entry Modules product data